CYFRAL CHABELSKA I WSPÓLNICY SP.J.
UL. Konstantynowska 62/70 95 - 100 ZGIERZ
TEL. (42) 639 98 70 FAX. (42) 639 98 77
info@cyfral.pl www.cyfral.pl

DV-4 DISTRIBUTOR

OPERATING, INSTALLATION AND PROGRAMMING MANUAL

1v0

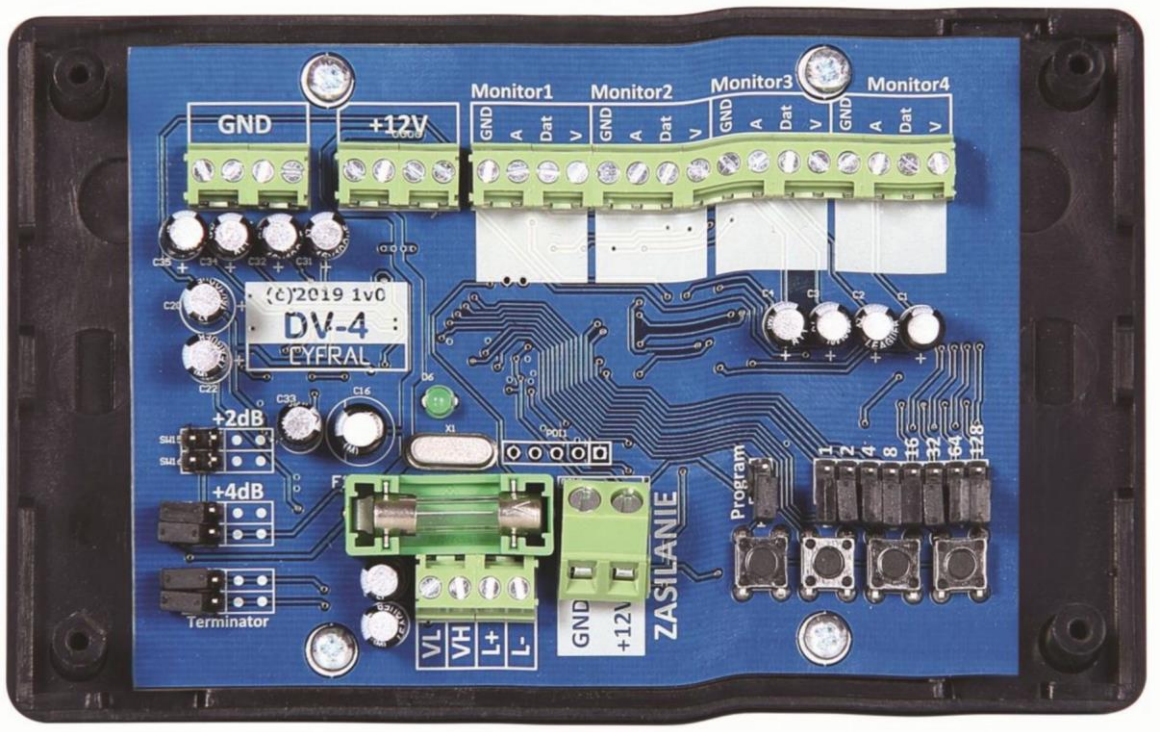

CYFRAL CHABELSKA I WSPÓLNICY SP.J.
UL. Konstantynowska 62/70 95 - 100 ZGIERZ
TEL. (42) 639 98 70 FAX. (42) 639 98 77
info@cyfral.pl www.cyfral.pl

CONTENTS

1. INTRODUCTION

Before installing the device, read the following operating instructions. Installation may only be carried out by a qualified person with the adequate qualifications.

Distributor and devices connected to it are only approved for supply with extra-low voltage (ELV) with a value not exceeding the allowable safe contact voltage. Power devices (12V DC power supplies) **must comply** with EMC and safety standards in accordance with applicable European Union standards and ensure full **galvanic isolation from the power grid.**

The device is equipped with a max. 4A fine fuse For the best protection it is recommended that the value of this fuse is dependent on the number of connected monitors. 0 monitors - 1A, 1 monitor - 1A, 2 monitors - 2A etc.

It is forbidden to connect foreign installations and devices to the terminals of the DV-4 distributor, as this may result in unforeseen operation of the device, fire or electric shock.

The device is intended for installation only inside rooms. It is not allowed to install the distributor on the building façade or fence posts.

Terminal marking on the DV-4 board:

POWER SUPPLY:
- 12V ..... Positive supply
- GND..... Supply minus

MONITORS:
- GND..... Monitor's signal ground
- A ..... Audio signal
- V ..... Video signal
- Dat ..... Digital data transmission

MONITORS' POWER SUPPLY:
- +12V ..... Monitors' positive supply
- GND..... Monitors' signal ground

CYFRAL CHABELSKA I WSPÓLNICY SP.J.
UL. Konstantynowska 62/70 95 - 100 ZGIERZ
TEL. (42) 639 98 70 FAX. (42) 639 98 77
info@cyfral.pl www.cyfral.pl

VIDEO / UNIPHONE LINE:

- L-.....Uniphone ground voltage
- L+.....Uniphone line
- VL.....Differential video signal(negative)
- VH.....Differential video signal(positive)

2. DEVICE DESCRIPTION

The DV-4 distributor is a four-channel video signal distributor and number decoder for the CC-4000 digital video door entry system. Converts symmetrical video and uniphone line signals into four channels to connect subscriber monitors.

The distributor has a built-in decoder for physical addresses of uniphone lines and needs to be programmed. The advantage of this solution is that there is no need to address each of the monitors, and the possibility of connecting up to three monitors in one apartment (internal intercom). Additionally, the subscriber's monitor is not able to influence the operation of the rest of the entry system.

The distributor is supplied with direct current of 12-13.8V voltage and intensity depending on the number of monitors supplied. It should be assumed that the power supply unit should have an output of 1A per monitor. If the distributor does not power any monitor (monitors powered locally), the distributor can be powered from the CC-4000 control electronics board.

All distributors within one staircase are connected in parallel.

To the inputs of the distributor we connect:

- Power supply - **GND** and **12V terminals**
- The video signal coming from the CC-4000 board - **VL** and **VH terminals**
- Uniphone line - **L+** i **L- terminals**

Connect the video monitors to the outputs under **the Monitor "x" terminals:**

- GND - monitor ground
- V - video signal 75 Ohm
- A - audio signal
- Dat - digital communication

The power supply for the video monitors is taken from the quadruple terminals +12V and GND on the side of the monitor terminals. This power supply is optional as the monitors can be powered locally from their own power supplies. Each output is protected against short circuit by a polymer fuse, also short circuit of power supply on the subscriber side does not block the device.

CYFRAL CHABELSKA I WSPÓLNICY SP.J.
UL. Konstantynowska 62/70 95 - 100 ZGIERZ
TEL. (42) 639 98 70 FAX. (42) 639 98 77
info@cyfral.pl www.cyfral.pl

3. CONFIGURATION

On the board there are two groups of jumpers to configure.

THE FIRST GROUP CONCERNS THE VIDEO SIGNAL

- Terminator - each video track must be "memorised" at the ends in order to match the impedance correctly. Terminator" jumpers are placed in the distributor furthest from the signal source, i.e. from the CC-4000 control electronics.
- Amplification - in case of insufficient signal power (this is manifested by dark, fading image) it can be amplified by placing pairs of +2dB or +4dB jumpers, remembering to **always** place jumpers in pairs.

THE SECOND GROUP OF JUMPERS CONCERNS THE DECODER OF PHYSICAL ADDRESSES.

In order for the distributor to work properly with monitors, it must be programmed. This action is performed very similarly to SMART-D uniphone. You must assign a physical address from pool 255 from which the call is to be sent to each *Monitor1- Monitor4* output. For one uniphone line, each device (monitor, uniphone) can have **only one** physical address.

To program the distributor, you only need a power supply, without any additional wiring. To set the address for a specific output, a **"program"** jumper must be set - the LED should go out. Then with the addressing jumpers 1,2,4,8,16,32,64,128 we choose the physical number we are interested in. Buttons 1-4 are used to transcribe the physical address to the Monitor1-Monitor4 outputs.

So in order to assign an address e.g. "80" for the output of Monitor3 it is necessary to:

- Insert "program" jumper (LED goes out)
- Select the sum with the address jumpers: 64+16
- Press and **hold** the button labeled "3" until the LEDs blink
- Remove the jumper "program"

To delete an address from a given output, repeat the above procedure by selecting the address "0", i.e. program without address jumpers.

Under each Monitor1-Monitor4 terminal there is a white field on the PCB where it is worth to write down the programmed addresses.

CYFRAL CHABELSKA I WSPÓLNICY SP.J.
UL. Konstantynowska 62/70 95 - 100 ZGIERZ
TEL. (42) 639 98 70 FAX. (42) 639 98 77
info@cyfral.pl www.cyfral.pl

4. CONNECTING

The distributor is connected to the monitor to the IN **socket** according to the indications:

Distributor Monitor

GND..... GND
A ..... AUDIO
Dat .....DATA
V ..... VIDEO
+12V .....+12V

When supplying monitors from a distributor, pay special attention to the quality and cross section of the GND cable. Its resistance should not exceed O.5 Ohm (30 meters at the cross section 1mm ^2). Otherwise, the monitor may be severely disturbed or impossible to operate.

In installations where the distance of monitors from the distributor exceeds 15 meters, it is recommended to power the monitors from a local power supply.

Below is a diagram of the installation with monitors supplied from a distributor

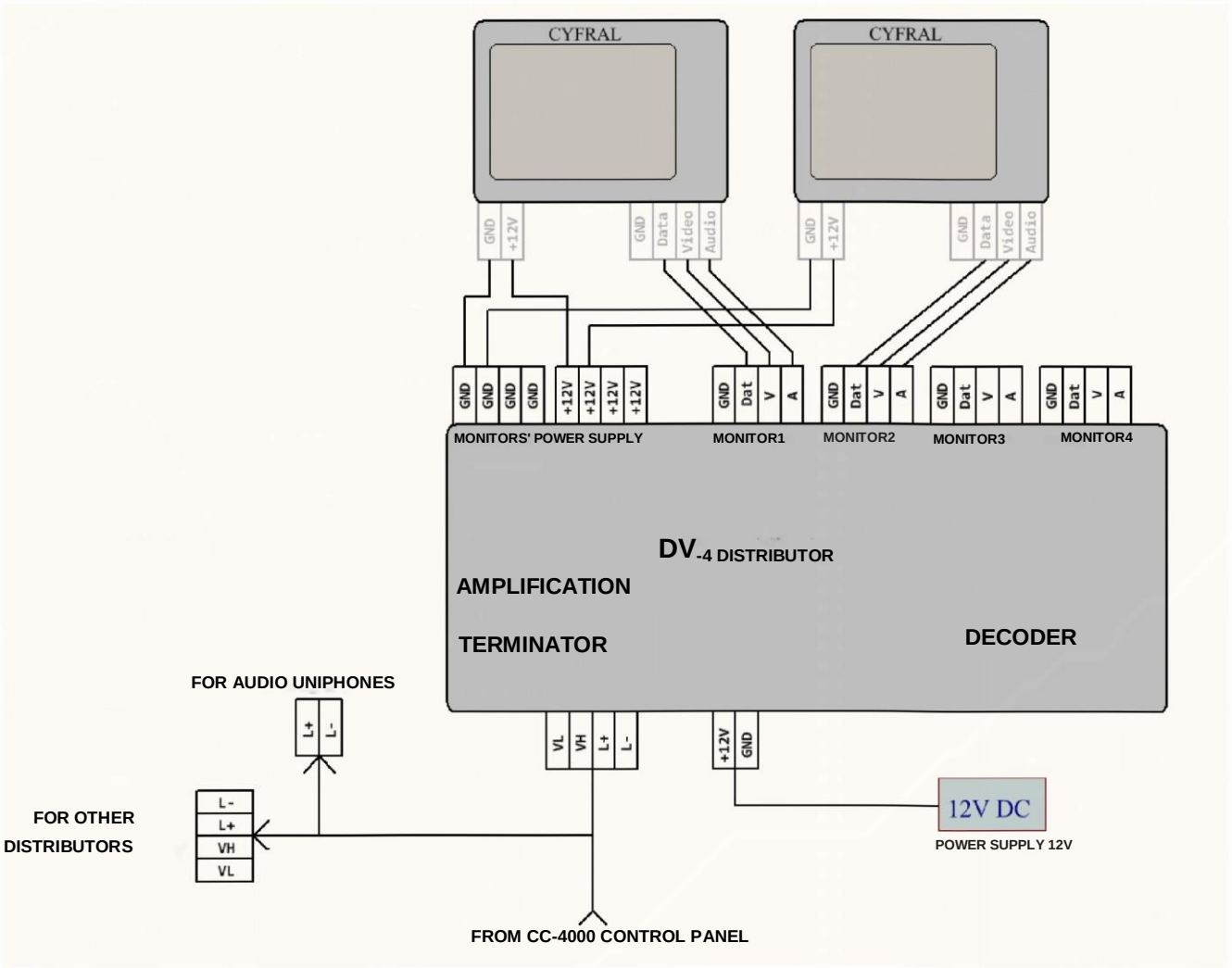

CYFRAL CHABELSKA I WSPÓLNICY SP.J.
UL. Konstantynowska 62/70 95 - 100 ZGIERZ
TEL. (42) 639 98 70 FAX. (42) 639 98 77
info@cyfral.pl www.cyfral.pl

The maximum voltage drop on the GND power cord is 0.2-0.3V assuming the maximum current consumed by the monitor is 600mA. For signal cables it is best to use twisted-pair cables. A 12V/2A power supply is sufficient to power the above system.

Below is a scheme of installations with locally powered monitors. This configuration allows to increase the distance between monitors and distributor to 30 meters. Nevertheless, the quality of reception is strongly dependent on the quality of the installation and potential sources of interference.
Monitors are powered from dedicated 12V/1A power supplies.
The distributor can be powered from a separate 12V/1A power supply or from the same power supply as the CC-4000 control electronics.
Current consumption by the distributor itself is about 40mA so you can power several distributors from one power supply, provided that no distributor powered in this way will connect the power to the monitor.

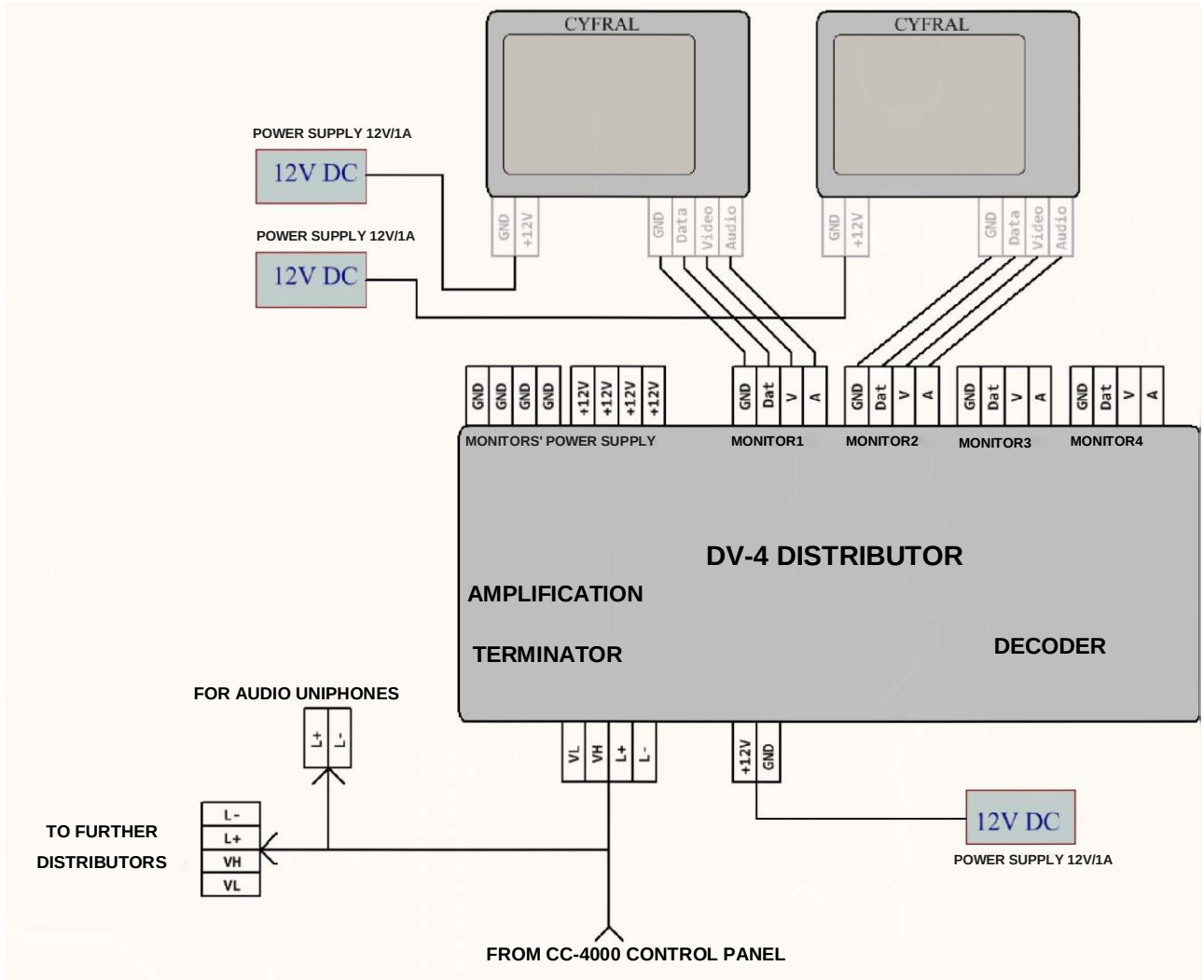

After connecting the power supply to the DV-4 board, the LED must light up. If this is not the case, check if the "program" jumper is installed. If it is, remove it. The LED indicates the correct power supply and operation of the processor.

CYFRAL CHABELSKA I WSPÓLNICY SP.J.
UL. Konstantynowska 62/70 95 - 100 ZGIERZ
TEL. (42) 639 98 70 FAX. (42) 639 98 77
info@cyfral.pl www.cyfral.pl

5. VIEW OF BOARD

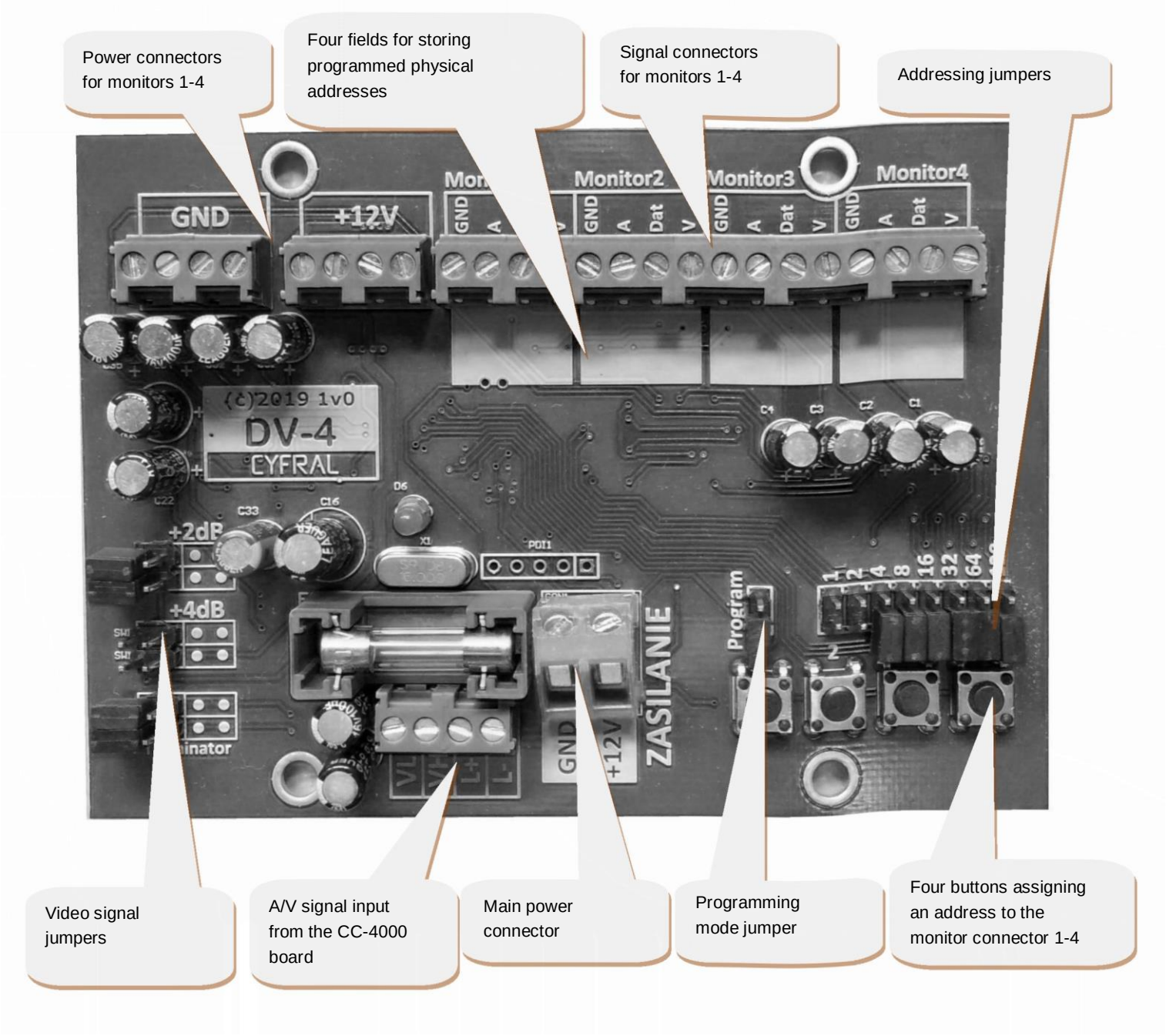

CYFRAL CHABELSKA I WSPÓLNICY SP.J.
UL. Konstantynowska 62/70 95 - 100 ZGIERZ
TEL. (42) 639 98 70 FAX. (42) 639 98 77
info@cyfral.pl www.cyfral.pl

6. TECHNICAL DATA OF THE DEVICE:

- Supply voltage .....12-13.8V DC stabilized
- Power consumption 600mA/Monitor
- Power consumption of DV-4 only .....about 40mA
- Video transfer bandwith .....25 Hz to 10 MHz
- Gain adjustment.....0, 2dB, 4dB
- Dimensions with housing.....130x80x33mm
- Overcurrent protection 4A
- Protection class IP30
- Video input impedance.....100 Ohm
- Video output impedance.....75 Ohm
- Input resistance L +.....125 kiloomów
- Surge protection