PORTUGAL

EN

STARK

USER'S AND INSTALLER'S MANUAL

Motorline® PROFESSIONAL

V2.0
REV. 08/2020

00. CONTENT

INDEX

01. SAFETY INSTRUCTIONS
STANDARDS TO FOLLOW 1B

02. OPERATOR
TECHNICAL SPECIFICATIONS 4A
DIMENSIONS 4B
COMPONENT KIT 4B

03. INSTALLATION
INSTALLATION MAP 5
UNLOCK OPERATOR 6A
FOUNDATION 6B
OPERATOR INSTALLATION 7
INSTALLATION OF STEEL GEAR RACK 8
INSTALLATION OF PLATES THE LIMIT SWITCHES 9

04. MAINTENANCE
MAINTENANCE 10

05. ELECTRONICS
ELECTRONICS ACCESS 11A
GENERAL INFORMATION 11B
FREQUENCY CONVERTER 12A
CONECTORS 12B

06. CONNECTIONS SCHEME
FREQUENCY CONVERTER CONNECTION 13
MR13 RECEIVER CONNECTION 14
ACCESSORY CONNECTION 15

07. PROGRAMMATION
DIGITAL NUMERIC KEYBOARD 16A
MENU NAVIGATION 16B
LOCK/UNLOCK KEYBOARD 17A
MENU 04 ACCESS 17B
MENU 04 18A
LED DISPLAY MESSAGES 19A
FINAL CONSUMERS/SPECIALIZED TECHNICIANS INSTRUCTIONS 19B
PERFORMANCE TEST 20A
MR13 RECEIVER 21A
MX13 TRANSMITTER (OPCIONAL) 21B

01. SAFETY INSTRUCTIONS

STANDARDS TO FOLLOW

CE	This product is certified in accordance with European Community (EC) safety standards.
RoHS	This product complies with Directive 2011/65/EU of the European Parliament and of the Council, of 8 June 2011, on the restriction of the use of certain hazardous substances in electrical and electronic equipment.
	(Applicable in countries with recycling systems). This marking on the product or literature indicates that the product and electronic accessories (eg. Charger, USB cable, electronic material, controls, etc.) should not be disposed of as other household waste at the end of its useful life.To avoid possible harm to the environment or human health resulting from the uncontrolled disposal of waste, separate these items from other types of waste and recycle them responsibly to promote the sustainable reuse of material resources. Home users should contact the dealer where they purchased this product or the National Environment Agency for details on where and how they can take these items for environmentally safe recycling. Business users should contact their vendor and check the terms and conditions of the purchase agreement. This product and its electronic accessories should not be mixed with other commercial waste.
	This marking indicates that the product and electronic accessories (eg. charger, USB cable, electronic material, controls, etc.) are susceptible to electric shock by direct or indirect contact with electricity. Be cautious when handling the product and observe all safety procedures in this manual.

01. SAFETY INSTRUCTIONS

GENERAL WARNINGS

- This manual contains very important safety and usage information. very important. Read all instructions carefully before beginning the installation/usage procedures and keep this manual in a safe place that it can be consulted whenever necessary.
- This product is intended for use only as described in this manual. Any other enforcement or operation that is not mentioned is expressly prohibited, as it may damage the product and put people at risk causing serious injuries.
- This manual is intended firstly for specialized technicians, and does not invalidate the user's responsibility to read the "User Norms" section in order to ensure the correct functioning of the product.
- The installation and repair of this product may be done by qualified and specialized technicians, to assure every procedure are carried out in accordance with applicable rules and norms. Nonprofessional and inexperienced users are expressly prohibited of taking any action, unless explicitly requested by specialized technicians to do so.
- Installations must be frequently inspected for unbalance and the wear signals of the cables, springs, hinges, wheels, supports and other mechanical assembly parts.
- Do not use the product if it is necessary repair or adjustment is required.
- When performing maintenance, cleaning and replacement of parts, the product must be disconnected from power supply. Also including any operation that requires opening the product cover.
- The use, cleaning and maintenance of this product may be carried out by any persons aged eight years old and over and persons whose physical, sensorial or mental capacities are lower, or by persons without any knowledge of the product, provided that these are supervision and instructions given by persons with experienced in terms of usage of the product in a safe manner and who understands the risks and dangers involved.
- Children shouldn't play with the product or opening devices to avoid the motorized door or gate from being triggered involuntarily.

WARNINGS FOR TECHNICIANS

- Before beginning the installation procedures, make sure that you have all the devices and materials necessary to complete the installation of the product.
- You should note your Protection Index (IP) and operating temperature to ensure that is suitable for the installation site.
- Provide the manual of the product to the user and let them know how to handle it in an emergency.
- If the automatism is installed on a gate with a pedestrian door, a door locking mechanism must be installed while the gate is in motion.
- Do not install the product "upside down" or supported by elements do not support its weight. If necessary, add brackets at strategic points to ensure the safety of the automatism.
- Do not install the product in explosive site.
- Safety devices must protect the possible crushing, cutting, transport and danger areas of the motorized door or gate.
- Verify that the elements to be automated (gates, door, windows, blinds, etc.) are in perfect function, aligned and level. Also verify if the necessary mechanical stops are in the appropriate places.
- The central must be installed on a safe place of any fluid (rain, moisture, etc.), dust and pests.
- You must route the various electrical cables through protective tubes, to protect them against mechanical exertions, essentially on the power supply cable. Please note that all the cables must enter the central from the bottom.
- If the automatism is to be installed at a height of more than 2,5m from the ground or other level of access, the minimum safety and health requirements for the use of work equipment workers at the work of Directive 2009/104/CE of European Parliament and of the Council of 16

01. SAFETY INSTRUCTIONS

September 2009.

- Attach the permanent label for the manual release as close as possible to the release mechanism.
- Disconnect means, such as a switch or circuit breaker on the electrical panel, must be provided on the product's fixed power supply leads in accordance with the installation rules.
- If the product to be installed requires power supply of 230Vac or 110Vac, ensure that connection is to an electrical panel with ground connection.
- The product is only powered by low voltage satefy with central (only at 24V motors)

WARNINGS FOR USERS

- Keep this manual in a safe place to be consulted whenever necessary.
- If the product has contact with fluids without being prepared, it must immediately disconnect from the power supply to avoid short circuits, and consult a specialized technician.
- Ensure that technician has provided you the product manual and informed you how to handle the product in an emergency.
- If the system requires any repair or modification, unlock the automatism, turn off the power and do not use it until all safety conditions have been met.
- In the event of tripping of circuits breakers of fuse failure, locate the malfunction and solve it before resetting the circuit breaker or replacing the fuse. If the malfunction is not repairable by consult this manual, contact a technician.
- Keep the operation area of the motorized gate free while the gate in in motion, and do not create strength to the gate movement.
- Do not perform any operation on mechanical elements or hinges if the product is in motion.

RESPONSABILITY

- Supplier disclaims any liability if:
  - Product failure or deformation result from improper installation use or maintenance!
  - Safety norms are not followed in the installation, use and maintenance of the product.
  - Instructions in this manual are not followed.
  - Damaged is caused by unauthorized modifications
  - In these cases, the warranty is voided.

SYMBOLS LEGEND

- Important safety notices

- Useful information

- Programming information

- Potentiometer information

- Connectors information

- Buttons information

02. OPERATOR

TECHNICAL SPECIFICATIONS

Stark is designed to automate high weight sliding gates(max 8000kg) and is provided with a control board with frequency inverter, allowing better management and control over the operator.

To identify the different phases of operation, STARK is provided with two LED RGB:

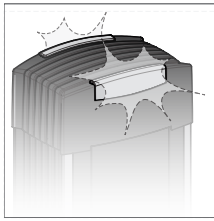

By opening course:
Flashing light turn flashing GREEN light

By the pause time while open:
Flashing light turn BLUE light

By closing course:
Flashing light turn flashing RED light

General advantages of operator:

- Opening and closing speed control as well as opening and closing deceleration speed
- Partial opening
- Presentman
- Flashing light output
- Photocell and safety band inputs
- Emergency stop
- Acceleration and deceleration ramp control
- Automatic closing

Operator technical specifications:

	STARK4000	STARK8000
• Power Supply	230Vac/50Hz	230Vac/50Hz
• Power	750W	1500W
• Current	4A	8A
• Working temperature	-20°C a +70°C	-20°C a +70°C
• Speed	0.18m/s	0.12m/s
• Maximum weight of gate	4000 kg	8000 kg
• IP Protection	IP54	IP54
• Force (50Hz frequency)	115 Nm	290 Nm
• Maximum force applied to gate	450kg	600kg
• Working frequency	75%	75%
• Accessory power supply	24Vdc/200mA	24Vdc/200mA

02. OPERATOR

DIMENSIONS

STARK4000 DIMENSIONS

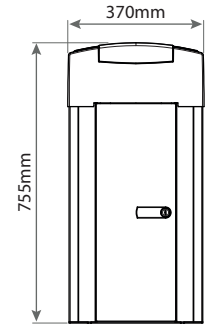

STARK8000 DIMENSIONS

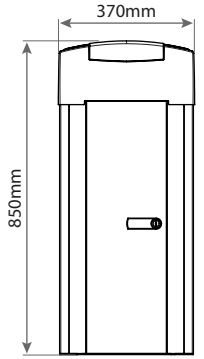

FIXATION PLATE DIMENSIONS

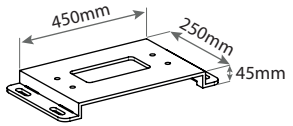

FIXATION PLATE DIMENSIONS

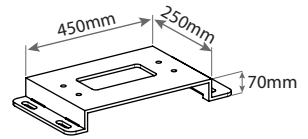

COMPONENT KIT

You should check if the following items are in the operator kit before you start the installation.

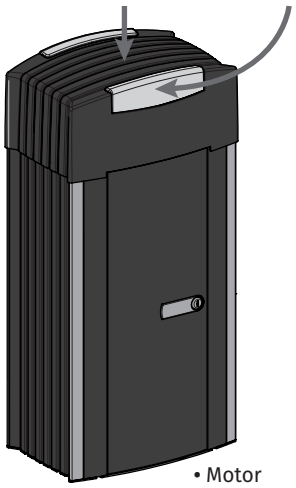

• release keys

• User's manual

• Fixation plate of the limit switches

• 2 FALK remote controls

• screws

• MF30 photocells

• breathing cap

03. INSTALLATION

INSTALLATION MAP

1 • Stark
2 • Photocell support column
3 • Plate of limit switch
4 • Photocell
5 • Steel rack
6 • Flashing light
7 • Antenna
8 • Key selector
9 • Gate
10 • Frequency converter
11 • Control board
12 • Cover unlocker
13 • Motor
14 • Lock barrel (motor access)
15 • Operator unlocker
16 • Speed bump
17 • Fixation plate
18 • Flashing light (optional)
19 • Safety band (optional)
20 • MX13 (optional)

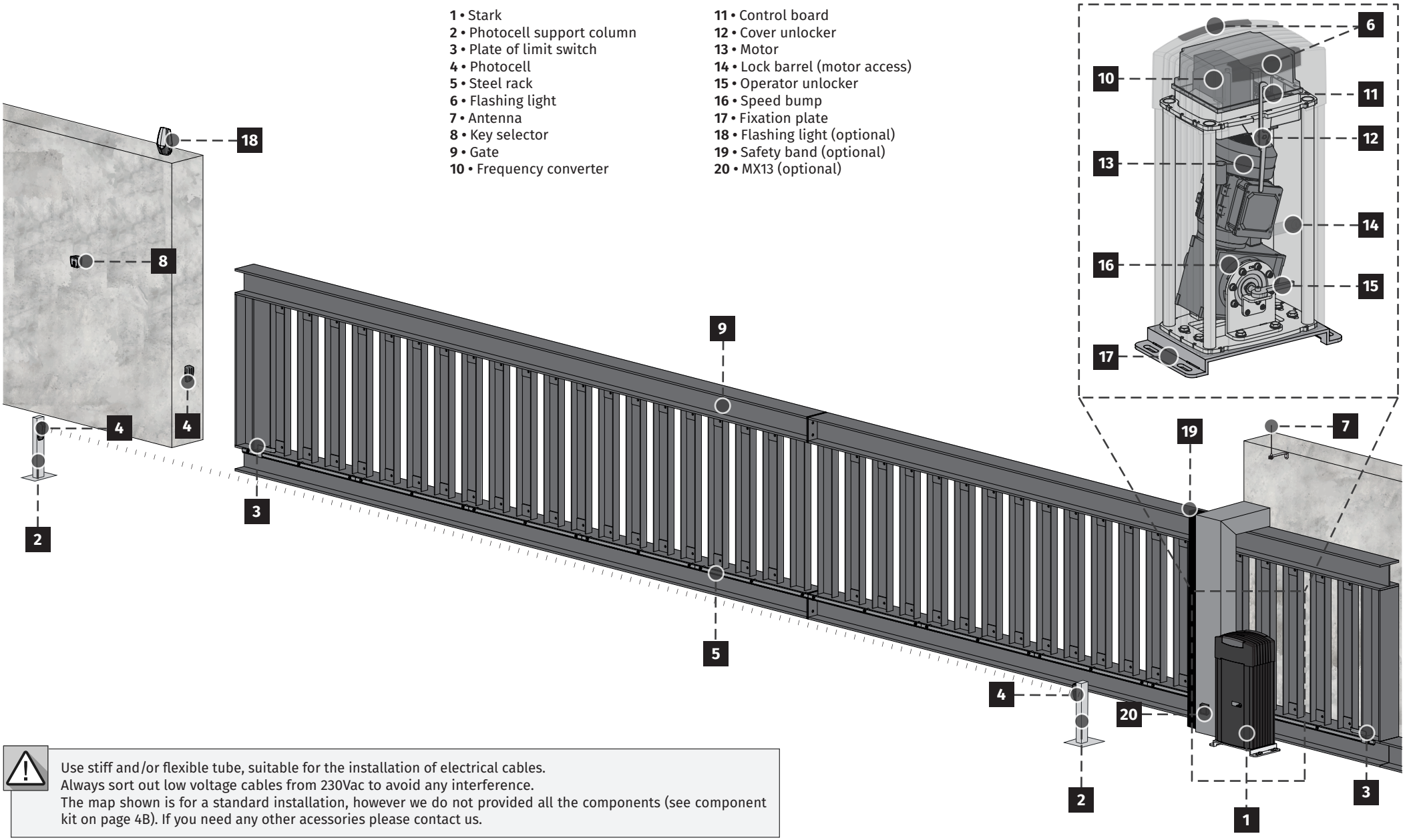

Use stiff and/or flexible tube, suitable for the installation of electrical cables.
Always sort out low voltage cables from 230Vac to avoid any interference.
The map shown is for a standard installation, however we do not provided all the components (see component kit on page 4B). If you need any other acessories please contact us.

03. INSTALLATION

UNLOCK OPERATOR

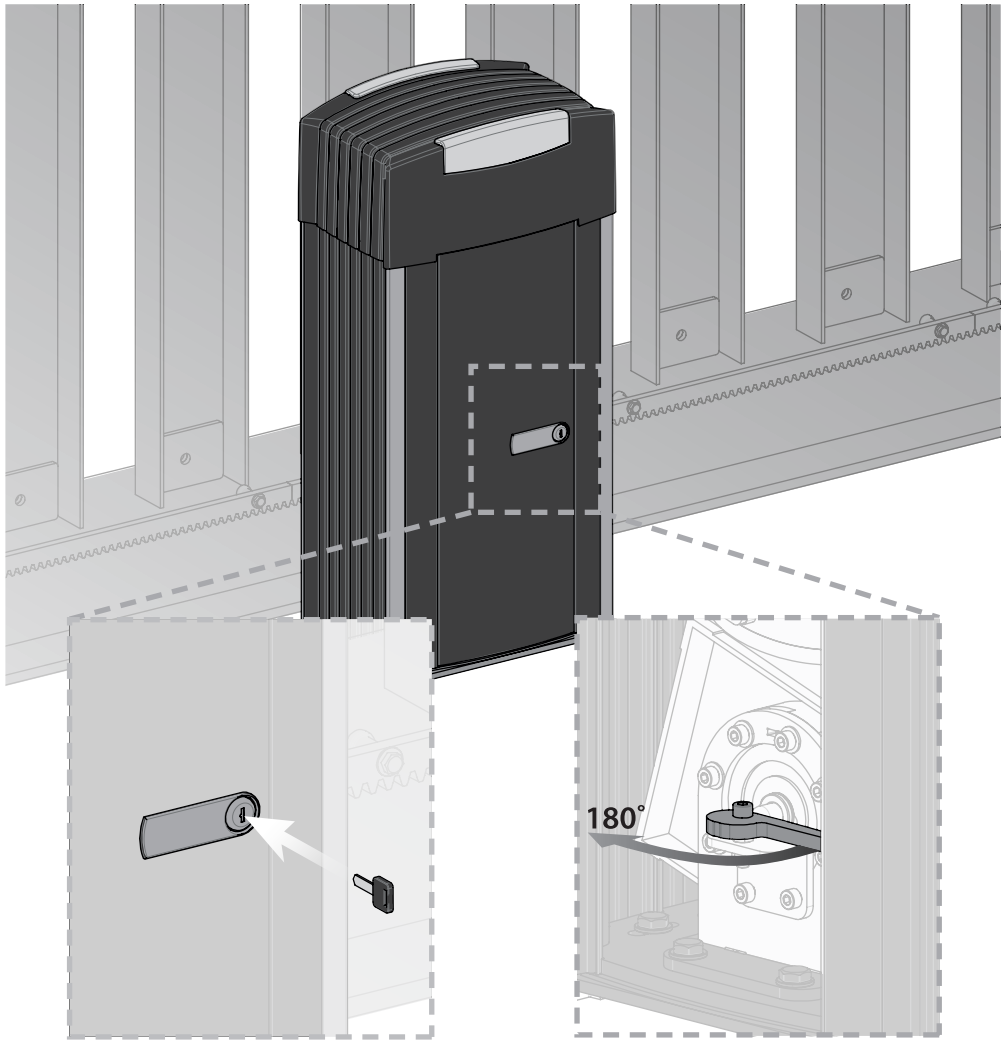

1 Insert the key and turn it 90°.

2 Turn the unlocker 180°.

After following these steps, it is possible manually open/close the gate.
In order to operator return to normal operation, you have to turn the the unlocker 180°.

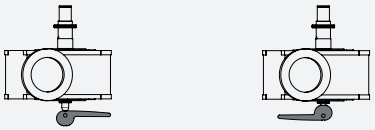

03. INSTALLATION

FOUNDATION

• CREATE FOUNDATION

1 Make a hole in the ground by 400x700mm and 500mm by deep.

2 Fill the hole with fresh concrete and smoothe the top part where you will fix the plate.

3 The fixation plate should be applied in the concrete while it is still freash (see page 7).

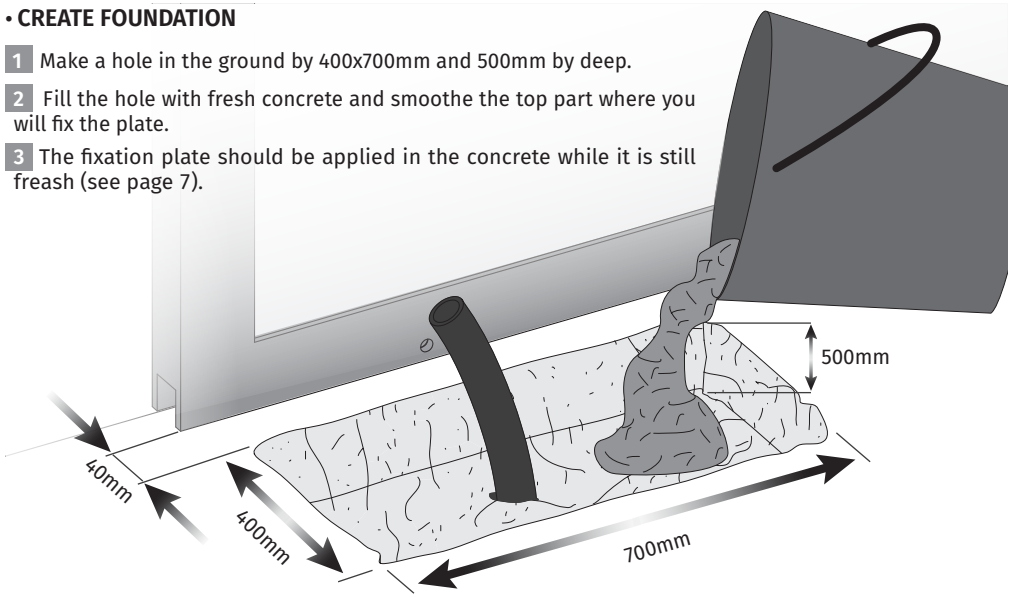

• EXISTING FOUNDATION

In case there is already a foundation,proceed the installation (see page 7).

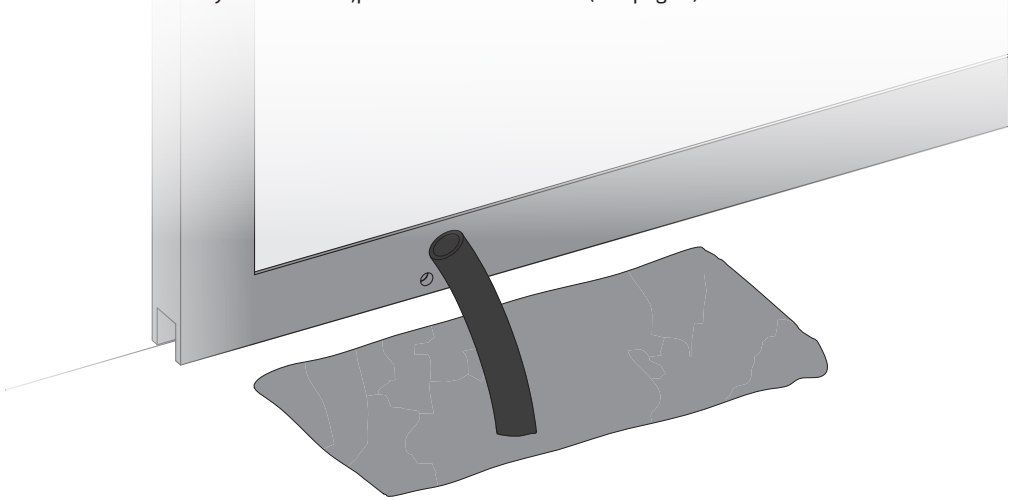

03. INSTALLATION

OPERATOR INSTALLATION

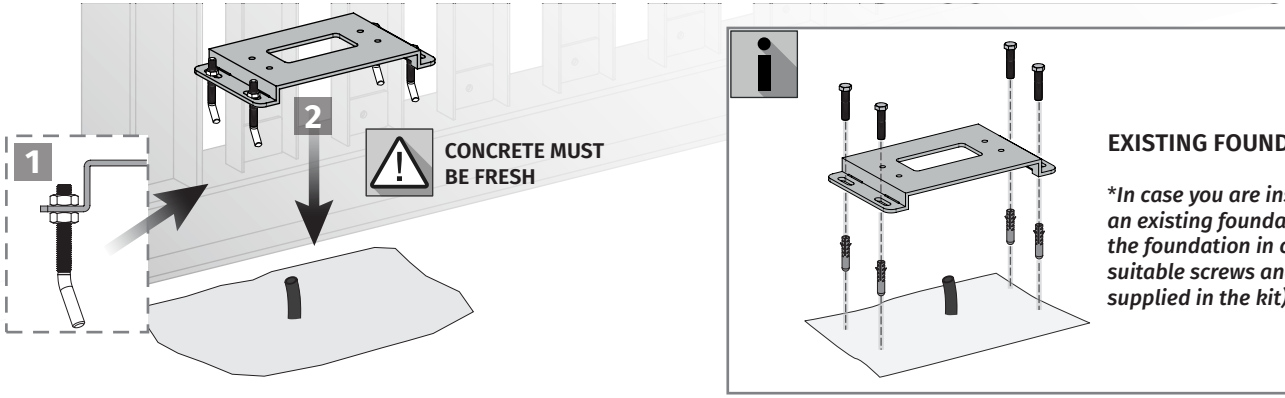

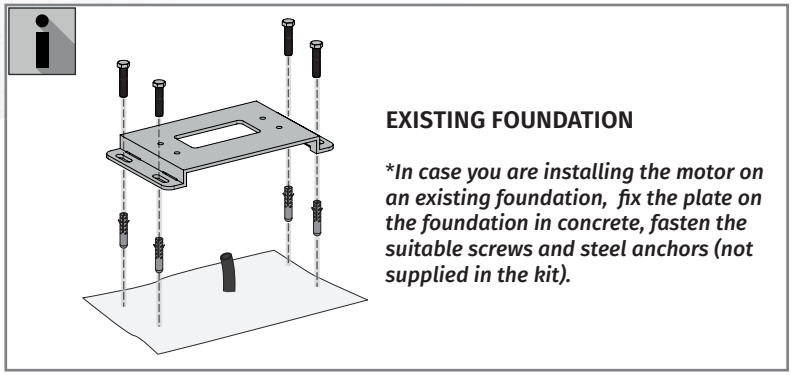

EXISTING FOUNDATION

In case you are installing the motor on an existing foundation, fix the plate on the foundation in concrete, fasten the suitable screws and steel anchors (not supplied in the kit).

Be careful with the importance of this installation, as it will be exposed to motions of heavy loads.
The screws and steel anchors must be appropriate to the floor and weight of the gate.

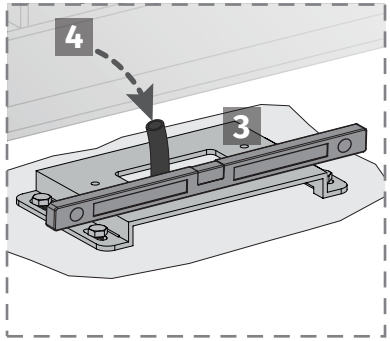

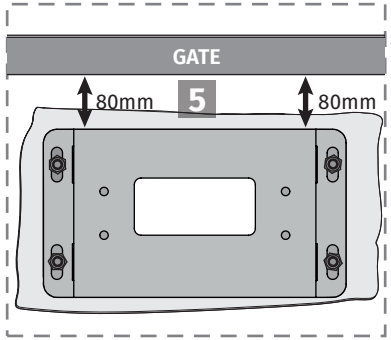

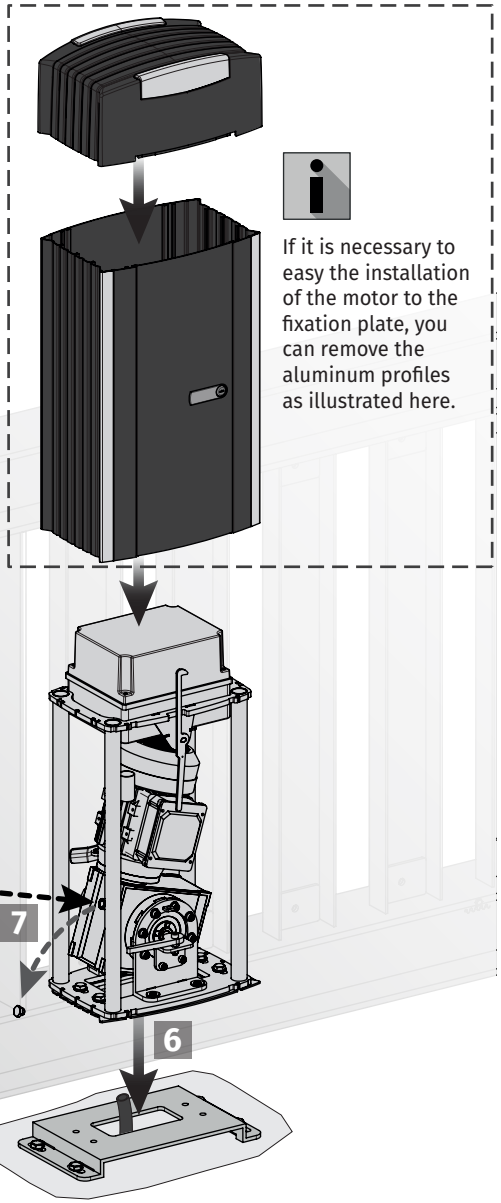

If it is necessary to easy the installation of the motor to the fixation plate, you can remove the aluminum profiles as illustrated here.

1 Place the screws and steel anchors into the four holes of the fixation plate and tighten.

2 With the concrete still fresh, apply the fixation plate.
In case you are installing the motor on an existing foundation, fix the plate on the foundation in concrete, fasten the suitable screws and steel anchors (not supplied in the kit).

NOTE • It is important to leave one or more tubes to run electrical cables through the fixation plate.

3 With a level, verify if the fixation plate is levelit horizontally. The fixation plate should be placed parallel to the gate to ensure that the steel rack and pinion fit perfectly.

4 Cross the eletrical cables to connect the motor to the acessories and power supply. Leave the cables with a length that ensure easy connection to the control board.

5 Adjust the distance between the fixation plate and the gate. The recommended distance is 80mm, considering that the screws are centered with the fixation plate holes, allowing adjustment (if necessary).

6 Place the motor in the fixation plate, leaving it centered and tighten the screws.

7 Replace the screw for the breathing cap of the speed bump (supplied on the kit).

03. INSTALLATION

INSTALLATION OF STEEL GEAR RACK

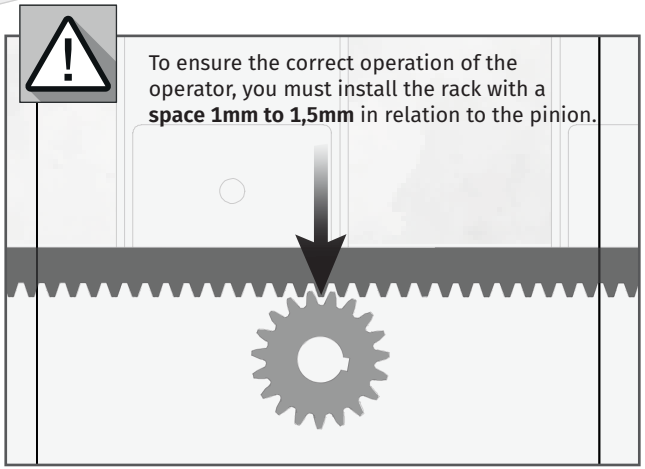

Put the gate open and unlock the motor (page 6A).
Fix the steel rack with suitable supports for installation.

1 Place a piece of rack on top of the pinion and fix it to the gate.
NOTE • Level it horizontally with a leve, before fixing.

2 Close the gate a bit until it is possible to apply another piece of rack on the pinion, and fix it to the gate.

3 To synchronize the teeth with the piece already installed, use na additional piece of rack (A) and place it under the union of the other two, holding them with clamps (B).

4 Open the gate to support the point of the new piece of rack on top of the pinion and weld the spacer.

5 Remove the piece of auxiliary rack and open the gate until the other end of the rack stands on top of the pinion. Weld the spacer.

6 Repeat the previous steps for each meter of the rack you need install.

7 Manually, test the movement of the gate with all racks installed and in case of finding some friction between the rack and pinion, adjust the rack.

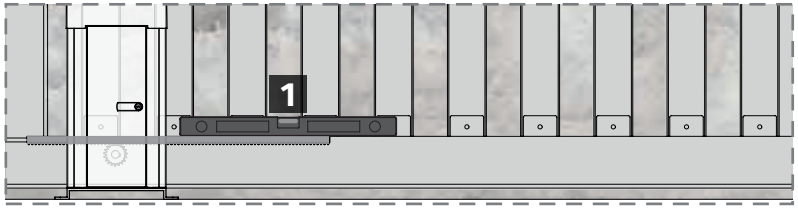

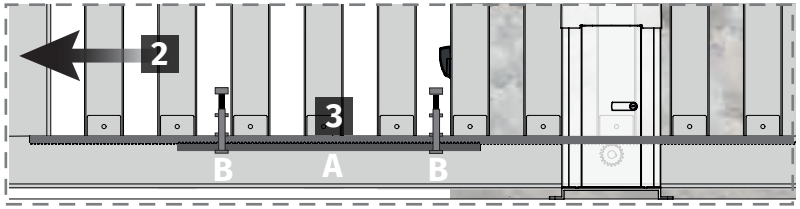

During the course of the gate, all elements of the rack must be mesh properly with the pinion!
Do not welded the spacers to the rack!
Do not use mass or other types of lubrificant between rack and pinion, because can damage the operator!

03. INSTALLATION

INSTALLATION OF PLATES THE LIMIT SWITCHES

1 Place the opening limit switch plate in the rack so that it can trigger the limit switch before the gate gets to opening stopper by 20 to 30mm.

2 Fix the limit switch plate to the rack with the screws supplied in the kit.

3 Move the gate to the closed position and repeat steps 1 and 2 to fiz the closing limit switch plate to the rack.

The limit switch plates must be tuned for the gate stop before it hits the opening and closing stoppers.
Manually, test the activation of the limit switches with the gate unlocked, before you connect it to the electric power, in order to prevent problems due to bad installation.
Check the illustrations to identify the correct installation of limit switch plates.

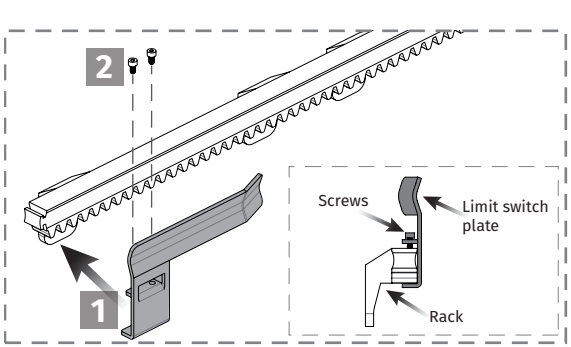

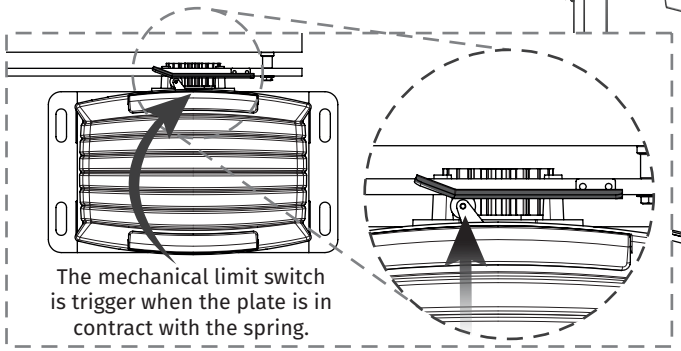

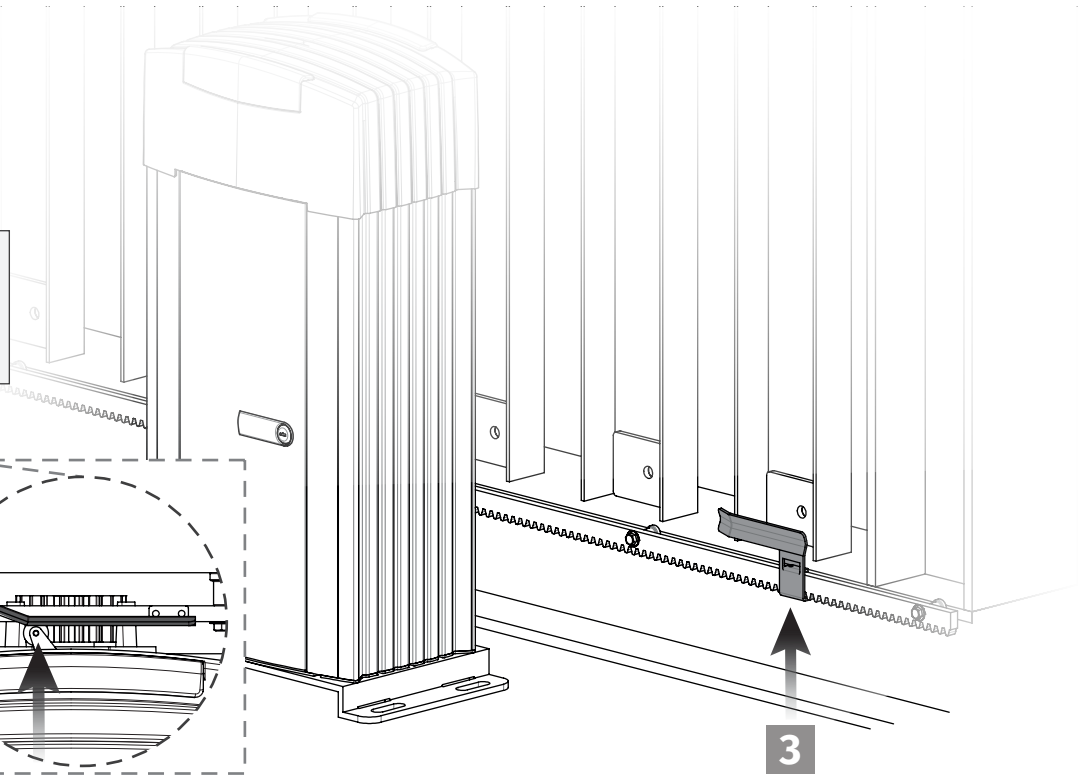

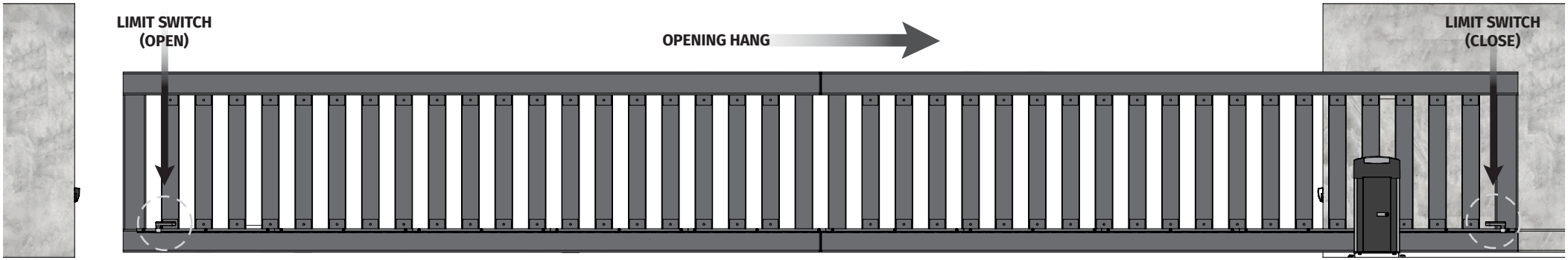

04. MAINTENANCE

MAINTENANCE

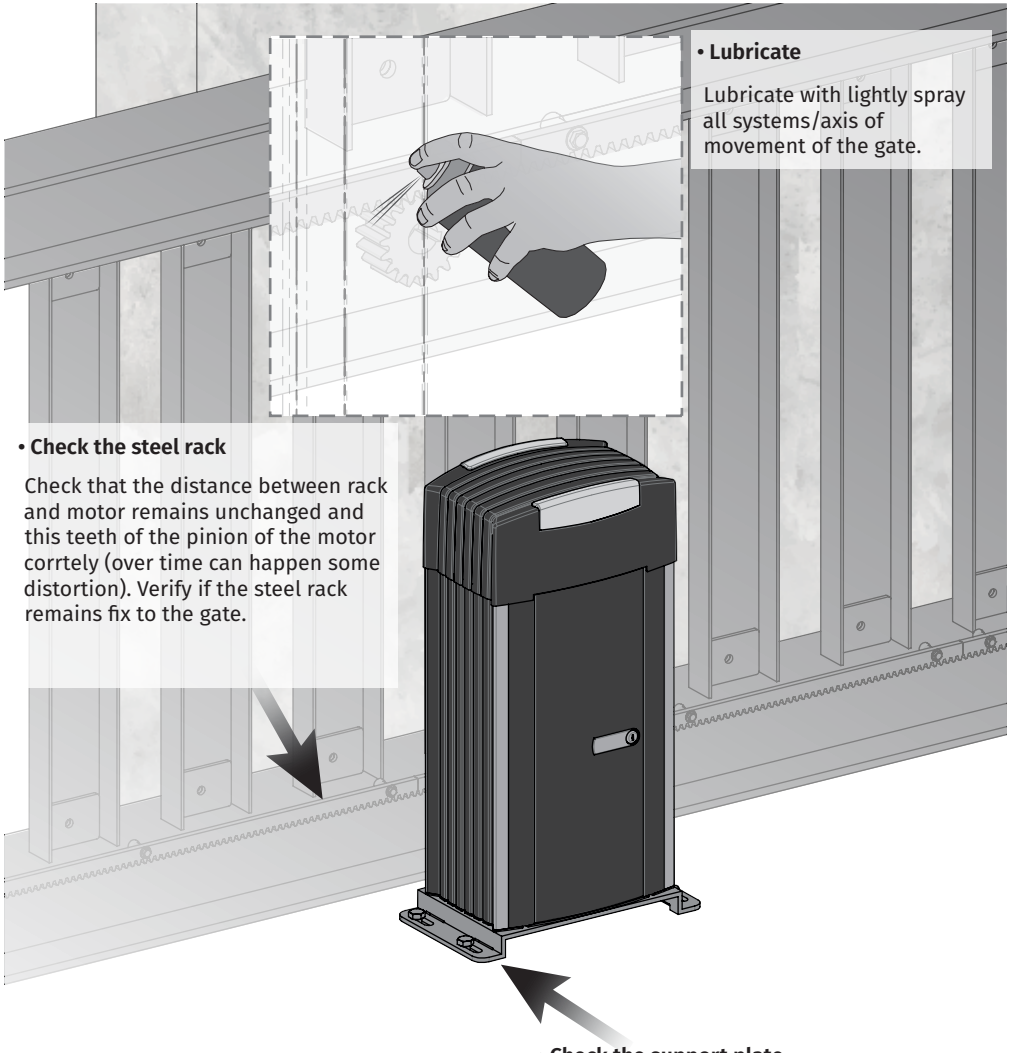

• **Lubricate**

Lubricate with lightly spray all systems/axis of movement of the gate.

• **Check the steel rack**

Check that the distance between rack and motor remains unchanged and this teeth of the pinion of the motor corrtely (over time can happen some distortion). Verify if the steel rack remains fix to the gate.

• **Check the support plate**

Check all supports remains fix to the pillars and gate for the good functioning of the operator.

The maintenance measures must be made every 6 monthns to maintain the good functioning of the operator.

05. ELECTRONICS

ELECTRONICS ACCESS

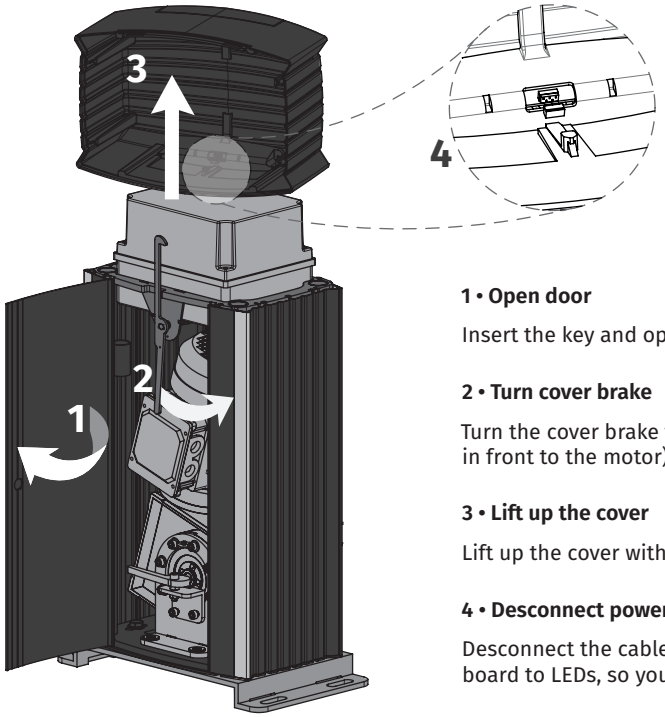

1 • Open door

Insert the key and open the door (page 6A).

2 • Turn cover brake

Turn the cover brake to the right side (if you are in front to the motor).

3 • Lift up the cover

Lift up the cover with caution.

4 • Desconnect power supply

Desconnect the cable that connects the control board to LEDs, so you can put down the cover.

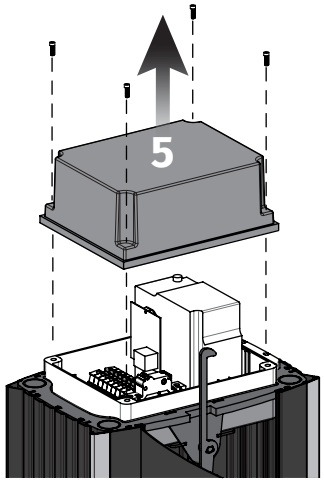

5 • Remove electronic cover

Unscrew the 4 screws and remove the electronic components protection cover. The process is now complete.

05. ELECTRONICS

GENERAL INFORMATION

- STARK 4000 and 8000 are provided with MC112NSC control board capable of function with motors until 1500W.
- It owns a frequency converter to perform smooth starts and stops, which makes the product reliable and longer durability.
- The opening/closing speed can be adjusted and also deceleration speed.
- The display built-in contro board allows an cognitive navigation through the menus and parameters, also an easy configuration.
- It is possible to see the measure of cycles made by the gate (opening and closing course complete means 1 cycle).
- The control board is capable of receiving ROLLING CODE remote controls signal through the MR13 receiver, as well as connecting obstacle detection kits throught the MX13 transmitter.

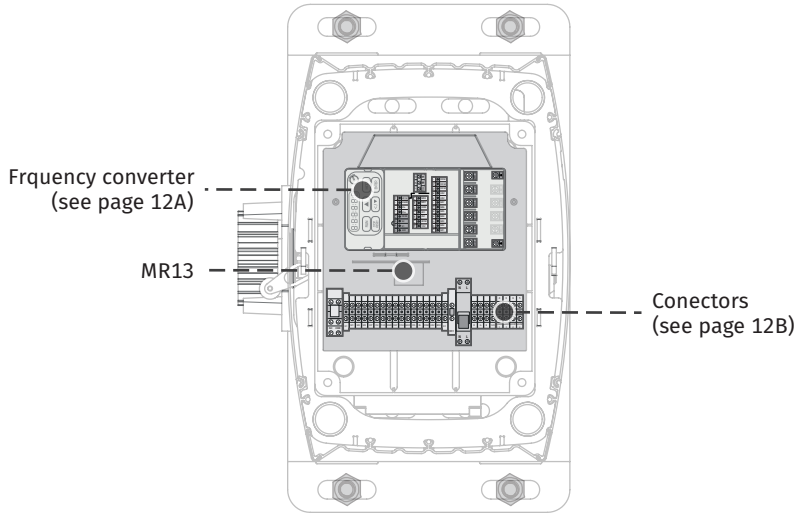

05. ELECTRONICS

FREQUENCY CONVERTER

In the following panel are all inputs and outputs of the fresquency converter.

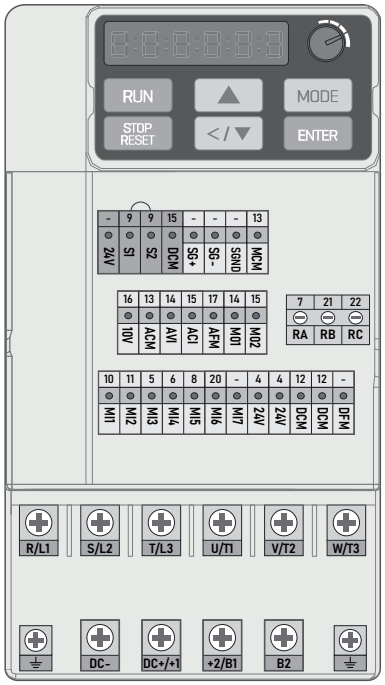

24V • STOP Common
S1 • STOP Button
S2 • STOP Button
DCM • Without use

SG+ • Without use
SG- • Without use
SGND • Without use
MCM • Voltage input for outputs **M01**

10V • Without use
ACM • Without use
AVI • Without use
ACI • Without use
AFM • Without use
M01 • Pulse output for MR13 and LED light control

MI1 • Opening Button (sequential)
MI2 • Close Button/pedestrian
MI3 • Open limit switch
MI4 • Close limit switch
MI5 • Photocells
MI6 • Safety band
MI7 • Encoder input
24V • Photocell and Radar output (24Vdc 3W)
24V • Photocell and Radar output (24Vdc 3W)
DCM • 24Vdc 3W Negative
DCM • 24Vdc 3W Negative
DFM • Without use

RA • NO Relay output for flashing light
RB • Without use
RC • Relay Common for flashing light

R/L1 • Power Supply 230Vac
S/L2 • Power Supply 230Vac

U/T1 • Motor output - Phase 1
V/T2 • Motor output - Phase 2
W/T3 • Motor output - Phase 3
T/L3 • Without use

⏚ • Ground wire
DC- • Without use
DC+/+1 • Without use
+2/B1 • Braking Resistor Wire
B2 • Braking Resistor Wire
• Ground wire

05. ELECTRONICS

CONETORES

In the following panel are all inputs and outputs of connectors.

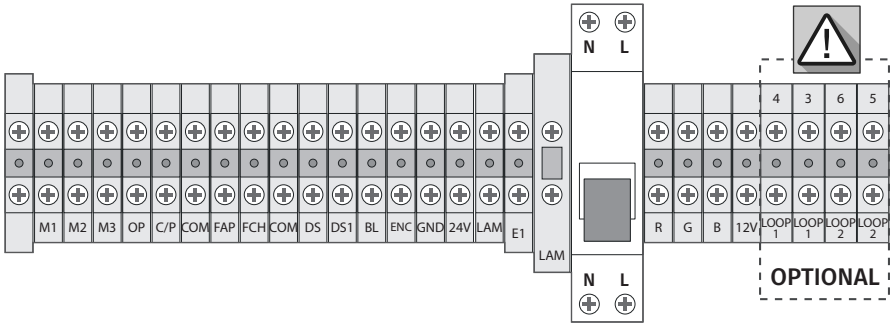

E1 • Ground

M1 • Motor output - Phase 1
M2 • Motor output - Phase 2
M3 • Motor output - Phase 3
OP • Opening Button (sequential)
C/P • Close Button/pedestrian
COM • Commom input (limit switch or start)
FAP • Open limit switch
FCH • Close limit switch
COM • Commom input (limit switch or start)
DS • Photocells input
DS1 • Safety band input
BL • STOP/Push button input
ENC • Encoder wire
GND • 24Vdc Negative
24V • Photocell and Radar output (24Vdc 3W)
LAM • Fuse output for flashing light (fuse 2A 500W, 230V)
LAM • Neutral

E1 • Ground

N • Power Supply 230Vac
L • Power Supply 230Vac

Circuit breaker DPN 16A

R • Red LED output
G • Green LED output
B • Blue LED output
12V • Power Supply 12Vdc 2W LED

LOOP1 • LOOP1 Magnetic loop
LOOP1 • LOOP1 Magnetic loop
LOOP2 • LOOP2 Magnetic loop
LOOP2 • LOOP2 Magnetic loop

OPTIONAL

06. CONNECTIONS SCHEME

FREQUENCY CONVERTER CONNECTION

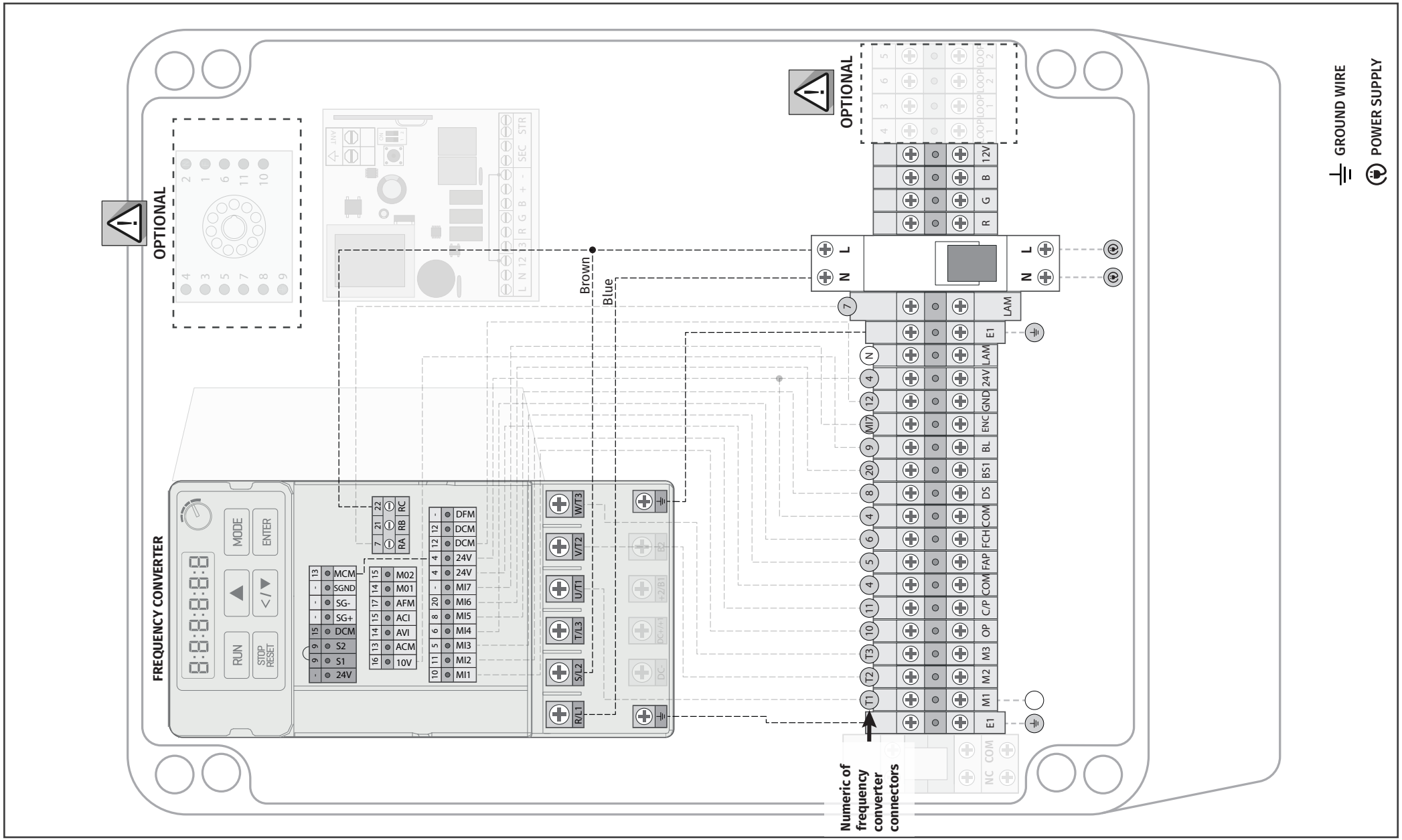

06. CONNECTIONS SCHEME

MR13 RECEIVER CONNECTION

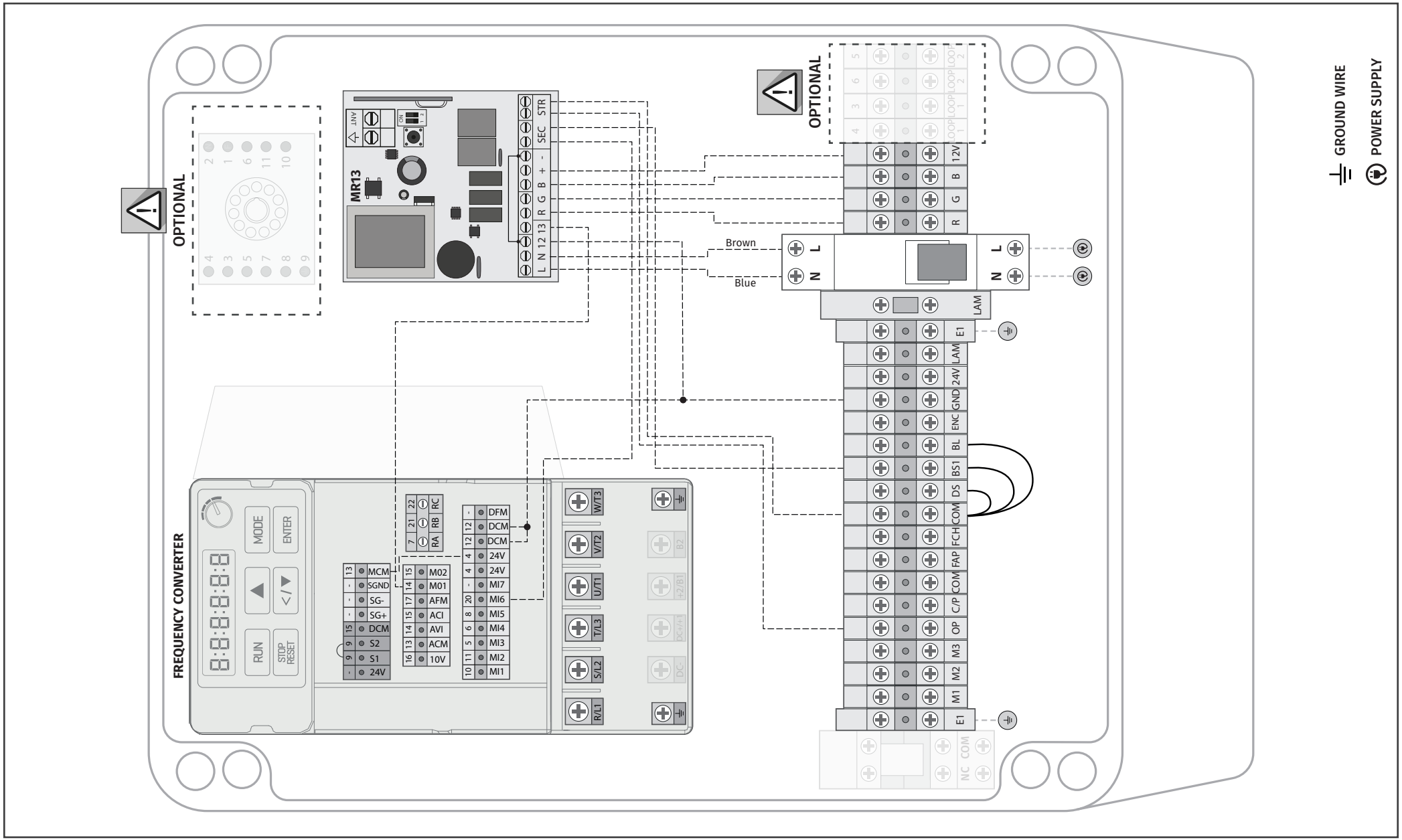

06. CONNECTIONS SCHEME

ACCESSORY CONNECTION

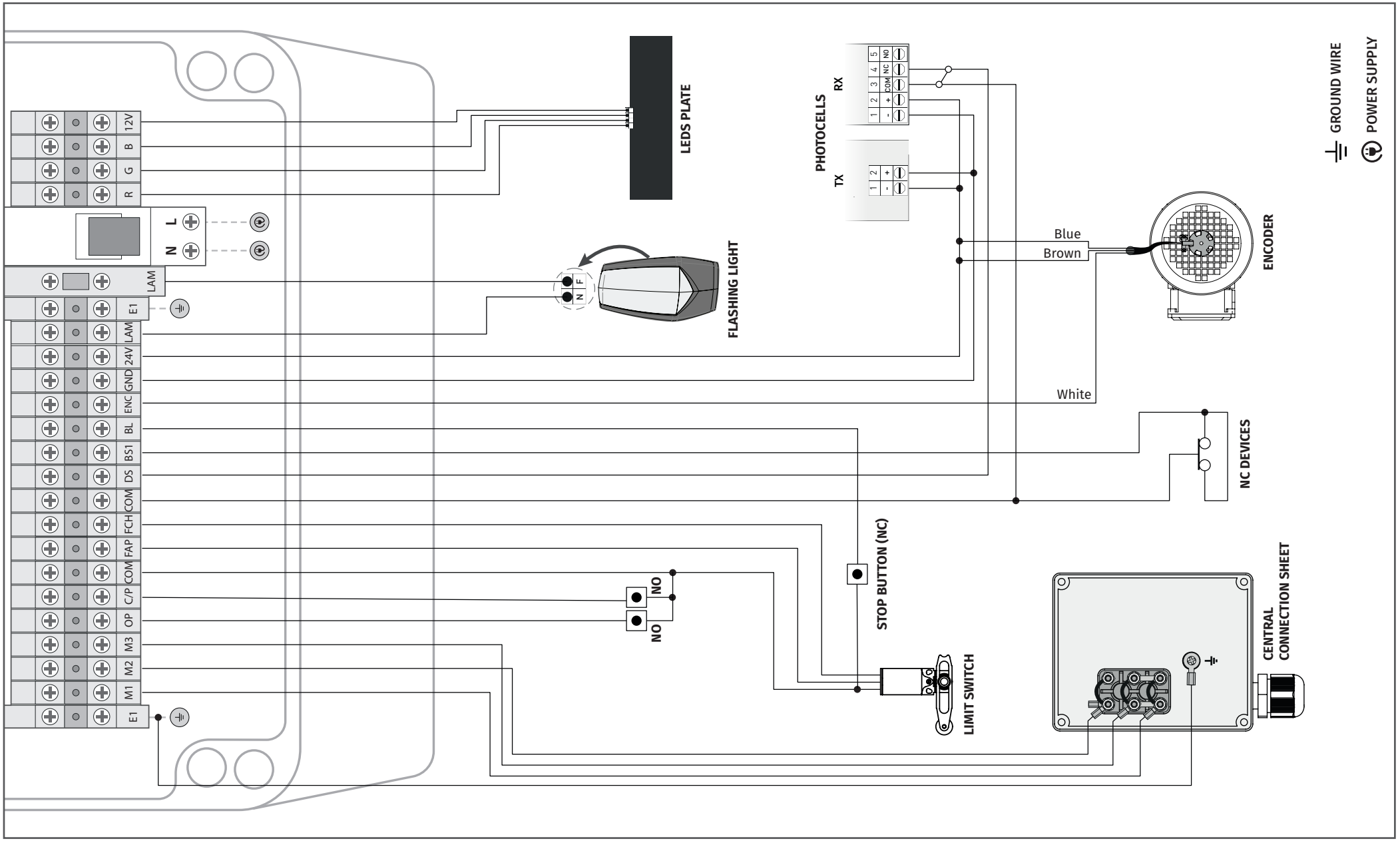

07. PROGRAMMATION

DIGITAL NUMERIC KEYBOARD

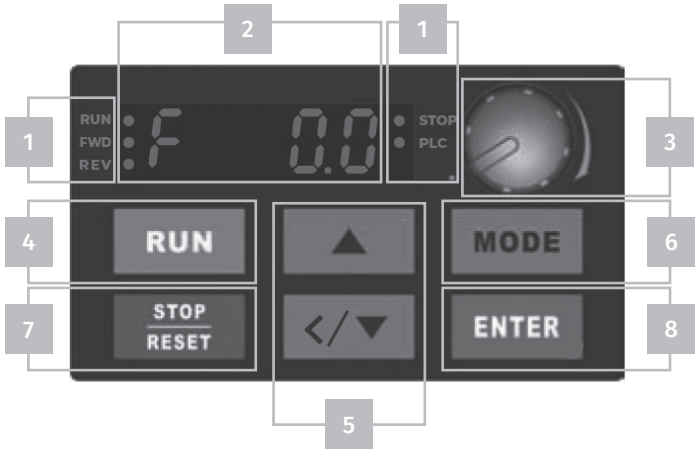

1	**Status Display** Displays the current status of control board	RUN	Converter OK
		FWD	Climbing motion
		REV	Climbdown motion
		STOP FLASHING	Stand by
		STOP OFF	Enable STOP or gate in motion
		PLC	The operator is function
2	**LED Display** Indicates frequency, voltage, current, user-defined units, etc		
5	**UP and DOWN Arrows** Allow define the number of parameters and change the numeric data for main frequency		
6	**MODE** Change in different views		
7	**STOP/RESET** Restarts the device after a failure occurs		
8	**ENTER** Used to enter/change programming parameters		

• **3** and **4** cannot be perform.

• Only the menus on page 18A e 18B can be set by the user. **Any other changes made to a menu than those listed on pages 18A e 18B will void the warranty**. Motorline is not liable for damage if this indication is not respected.

07. PROGRAMMATION

MENU NAVIGATION

1 Press **ENTER** to access to MENU.

2 Use the arrows, and select one of the **SUBMENUS**.

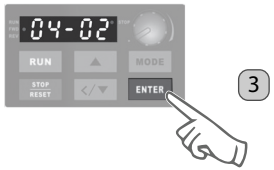

3 Press **ENTER** to access to **SUBMENU**.

4 Use the arrows, to change the value.

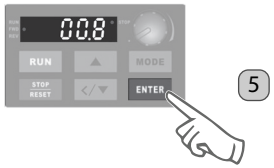

5 Press **ENTER** to confirm.

6 **End** indicates success.
Err indicates error.

To exit of the MENU press "MODE" until you reach "C".

LOCK/UNLOCK KEYBOARD

The keypad lock is done by password. Below are the steps for setting and using the password.

SET PASSWORD
Enter parameter **00.08** and write a password to lock the keyboard.
Parameter value will be change from 0 (disable) to 1 (enable).

CHANGE OF PARAMETER
1 · Enter parameter **00.07** and write the set password.
This will temporarily unlock the keyboard.
2 · Change the parameter you desire.
The unlock will remain until the motor made a new operation.

WRONG PASSWORD
1 · Have **3 attempts** to write the correct password in parameter **00.07**.
LED Display indicates the number of failed attempts from 01 to 03.
Example: At the 1st wrong attempt appears on LED Display 01.
2 · At 4th wrong attempt, the LED Display will display a error message Pcode.
3 · Unplug the power supply to have another 3 attempts.

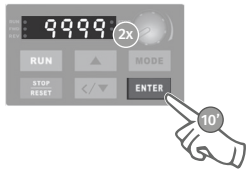

RESET FACTORY SETTINGS
1 · Write on parameter **00.07** the code **9999** two times.
2 · After press **ENTER** Button for **10 seconds**.
The factory value will be reset.

DISABLE PASSWORD
1 · Enter parameter **00.07** and write the set password.
2 · Enter parameter **00.08** and change the value from **1** to **0**.
Password will be disable.

See the page 16B to menu navigation.

MENU 04 ACCESS

1 Press **MODE** until reach the function **H**.

2 Press **ENTER** to access the function **H**.

3 Use the arrows to find value **04**.

4 Press **ENTER** to access **04**.

See the page 16B to menu navigation.

07. PROGRAMMATION

MENU 04

If the values are incorrectly adjusted, there is a risk of damage to the motor and inverter.

Parameter	Function	Settings	Factory Setting
04.00	**OPEN SPEED** Allows set gate opening speed.	00.00 to 60.00 Hz	50.00 Hz
04.01	**CLOSE SPEED** Allows set gate closing speed.	00.00 to 60.00 Hz	50.00 Hz
04.02	**OPENING DECELERATION SPEED** Allows to select the rate of deceleration on climbing. **NOTE** • The changes on deceleration opening or closing speed will change the lenght deceleration.	00.00 to 40.00 Hz	25.00 Hz
04.03	**CLOSING DECELERATION SPEED** Allows to select the rate of deceleration on climbdown. **NOTE** • If change the gate speed it is necessary adjust this parameter.	00.00 to 40.00 Hz	25.00 Hz
04.50	**LENGHT OPENING DECELERATION** Allows to set the lenght of deceleration. The lenght can be set in course programming or in the menu diretly. **NOTE** • At 1000 it means 1.5 meters of deceleration. If select 500 means a deceleration of 750mm.	0 to 1000 (ex: 1000=1.5m)	150 (250mm)
04.51	**LENGHT CLOSING DECELERATION** Allows to set the lenght of deceleration. The lenght can be set in course programming or in the menu diretly. **NOTE** • At 1000 it means 1.5 meters of deceleration. If select 500 means a deceleration of 750mm.	0 to 1000 (ex: 100=1.5m)	150 (250mm)
04.52	**PAUSE TIME** Allow to set the time the gate is paused when it is open. **NOTE** • By set 0 seconds, the gate has no pause time.	0 = OFF 0 to 99 (ex: 99=99 sec.)	0
04.53	**PRESENTMAN** This menu allows the gate to be pushed open until the limit switch is reached. In order to close the gate the user must be permanently pressing the gate down button. In this function the pedestrian button will be climbdown.	0 = Disabled 1 = ON	0 = Disabled
04.54	**OPERATING LOGIC** This menu allows to add 3 working modes each with their specifications.	0 = Step by step 1 = Condominium 2 = Inversion	0 = Step by step
04.55	**ACCELERATION RAMP AT OPENING** This menu allows you to adjust the opening acceleration ramp time to allow a smoother start of the gate.	0 to 30 (ex: 10=1 sec.)	15 (1.5 sec.)
04.56	**ACCELERATION RAMP AT CLOSING** This menu allows you to adjust the closing acceleration ramp time to allow a smoother start of the gate.	0 to 30 (ex: 10=1 sec.)	15 (1.5 s)

07. PROGRAMMATION

MENU 04

Parameter	Function	Settings	Factory Setting
04.57	**PEDESTRIAN OPENING TIME** This menu can select the lenght of the pedestrian opening. Knowing that 100 means 8M if put 12 means opening of a meter. If the present man is active this menu doesn't work. If set to 0 the CH/PED button will only be closed.	0 to 100	15 = 1.5 m
04.58	**DECELERATION RAMP AT INVERSION** Allows to set the deceleration time at inversion. Steeper or smoother stop.	0 to 20 (ex: 10=1 sec.)	10 (1 s)
04.59 04.60	**HANDLING COUNT** This function allows to view all complete handling performed by the operator. The menu 04.60 show the number of handling performed to the thousands while the menu 04.59 show up to hundreds of thousands (see example).	**Notes:** 1 Handling = 1 opening and closing cycle. **Example:** Menu 04.59 0002 Menu 04.60 0502 **Total Handling = 20502**	
04.61	**FLASHING LIGHT OUTPUT** Allows to change the logic of flashing light. If it is set to 0 the flashing light will be active only when the motor is working. If select 1 the flashing light is active as long as it exits the closing limit switch, when it reaches the closing limit switch it will remain light for the time set in menu 04.63.	0 = plugged in opening and closing 1 = courtesy light	0 = opening and closing
04.62	**RESET HANDLING COUNT** This menu allows to reset the handling of menus 04.59 and 04.60. In order to be able to reset, will need to enter the password available only to the Motorline technical department.	Password must be entered	
04.63	**COURTESY LIGHT TIME** This menu allows adjust the time when the light is on, since reaching the limit switch if selected in menu 04.61.	0 to 50 Min	3 = Min
04.64	**PROGRAMMATION MENU** This menu has the function of placing the control board in course programming.	0 to 1	1 = control board in programming
06.07	**OVER FORCE DETECTION LEVEL** 11 to 250% (100% menas to the nominal current of the inverter)	10% to 250%	120
06.08	**WAITING TIME WITH OVER FORCE** Allow to set how long it will take to react to over force.	00 to 60ms	0.1ms

LED DISPLAY MESSAGES

Message displayed	Description
	Displays the master frequency of the CA converter.
	Displays the effective output frequency at terminals U/T1, V/T2, and W/T3.
	Displays output current at terminals U/T1, V/T2, and W/T3.
	Open Gate - Displays the open operating status on the CA converter.
	Close Gate - Displays the close operating status on the CA converter.
	Input info. This info is displayed whenever there is no common input or parameter PLC1 is set to PLC0. It may also happen a short circuit in the 24V
	Mandatory mode for operation (**do not change this menu**)
	External failure.
	Shows “End” for approximately 1 second if the input was accepted, while press ENTER After set a value parameter, the new value is automatically add to the memory. To change an entry use the arrows ▲ and ▼.
	Displays “Err” if the entry is wrong.
	STOP active the crank sensor.
C333	Nothing active.
C888	Photocells active.
C101	Climbing limit switch active.
C202	Climdown limit switch active.

FINAL CONSUMERS/SPECIALIZED TECHNICIANS INSTRUCTIONS

Failure info	Failure description	Solutions
	OVERCURRENT Abnormal current increase	**01** • Check that the motor power correponds with the output power of the AC motor converter. **02** • Check for possible short circuits on wire connections of U/T1, V/T2, W/T3. **03** • Check for possible short circuits on wire connections between AC motor converter, motor and ground wire. **04** • Check for loose contacts between the AC motor converter and motor. **05** • Check for possible excessive load conditions on the motor. **06** • After a short circuit, if exist any malfunctions of the AC motor converter, you should send the product for the manufacturer.
	OVERVOLTAGE The DC voltage exceeded the maximum allowed value.	**01** • Check if the input voltage of AC motor converter is within the rated voltage class. **02** • Check for possible voltage deviations. **03** • Check that the power required for the brake is within the set limits.
	LOW VOLTAGE AC motor converter detects DC terminal voltage is lower than the minimum value.	**01** • Check if the input voltage of AC motor converter is within the rated voltage class. **02** • Check for abnormal motor load. **03** • Check for the incoming power wires are correct with R-S-T (for three-phase models) without phase be lost.
	OVERLOAD AC converter detects exceed current on output control.	**01** • Check if the motor is overload. **02** • Use the following model, with AC converter motor power.
	OVERLOAD DURING ACCELERATION	**01** • Short circuit on motor output, check if the insulation on the output lines is in good conditions. **02** • Acceleration time too short: Increase the acceleration time.
	OVERCURRENT DURING DECELERATION	**01** • Short circuit on motor output, check if the insulation on the output lines is in good conditions.
	DETECTION OF EFFORT AND OVER COMSUMPTION	**01** • Check parameter 06.04 and set lower sensibility (set a value near to 200%). **02** • Check if the gate is stuck at some point.

07. PROGRAMMATION

PERFORMANCE TEST

After installation of the control board and wiring, ensure that all connected components are working properly. To do this, follow the steps:

• LIMIT SWITCHES TEST

First, you must set whether the operator is installed to the right or left of the gate. This information will indicate which side of opening and closing.

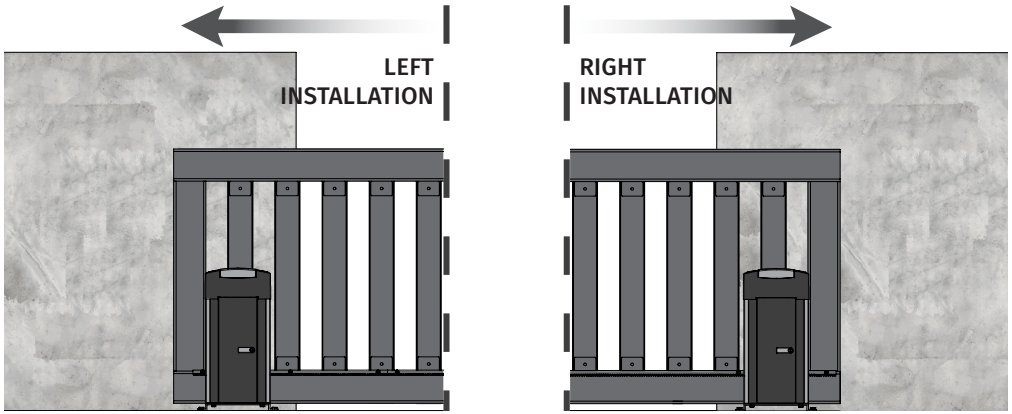

This test will be exemplified with the operator installed on the right side.
Tilt the spring operator limit switch to the right until you hear a "click" sound.
The display should show "C101"! Now tilt the spring limit switch to the left until you hear a "click" sound and show on the display "C202". If the "C202" appears first, you must change the cables.
Attention: When change the cables you must also change the limit switches cables and the motor wire to reverse the direction of motion.

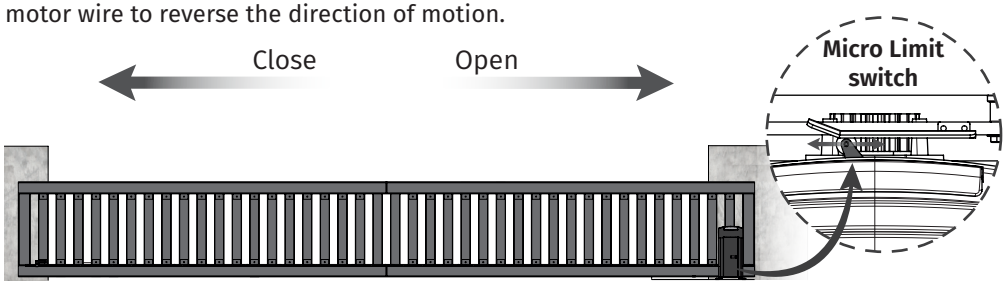

Limit switches are an important motor safety system. It is of utmost importance that they are correctly connected to the control board, otherwise they may cause serious damage or injuries.

07. PROGRAMMATION

PERFORMANCE TEST

• PHOTOCELLS TEST

The photocells are a safety device that inform the control board that any object is obstructing the gate path. They send a signal so that the gate does not close preventing damage to this object.

The photocells are connected to the DS input of the control board (see page 15). This input has an assigned LED that informs us of the photocell connection status. This LED is always on when a safety device is connected (NC).

To test the connection of the photocells in the control board, simply interrupt the signal between the two photocells by placing your hand in front of one of them. A "click" sound will indicate that the signal has been interrupted and will show on the display "C888" while the photocells are interrupted.
If it does not work this way, there is a problem connection between the photocells and the control board.

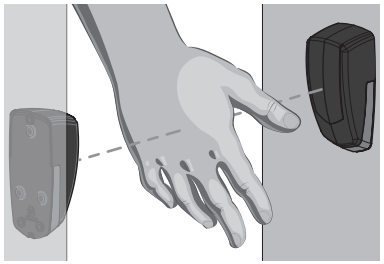

• COURSE PROGRAMMING

NOTE • It is not possible to deceleration more than 1.5 meters.

1 • Put the door (manually) in the closed position.
2 • Access menu **04.64** and set **1**.
3 • Press **OP** button or press the remote control programmed in **MR13**.
4 • The gate will start to open.
5 • When you want to start deceleration on opening, press again on remote controlor the **OP** button. The gate will slow down.
6 • When the gate reaches the opening limit switch, it will start closing.
7 • When you want to start closing deceleration, press again on remote controlor the OP button. The gate will slow down.
8 • When the gate reaches the closing limit switch, the course programming is completed.

07. PROGRAMMATION

MR13 RECEIVER

Wireless receiver for receiving signal from ROLLING CODE Motorline remote controls and MX13 transmitter for safety circuits (eg safety bands, magnetic contacts).
This receiver allows the use of a single MX13 transmitter.

DIPPER

• **Dippers 1** and **2** allow you to set the time interval between signal sends.
This signal shows the proper functioning of the sender's communication with the receiver.

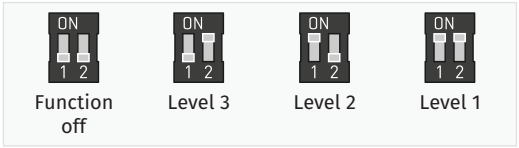

• For MX13 and MR13 devices to be synchronized, you must configure **dippers 1** and **2** in the same way on both devices.

LEARN KEY

• This button is used when programming Rolling Code Motorline remote controls or MX13 transmitter.

Remote control programming:
1 • Press **LEARN** button once and **LED4** will flash once.
2 • Then press the button you want to program.

Programming transmitter MX13:
1 • Press **LEARN** button 2 quick times and **LED4** will flash 2 times.
2 • Press MX13 **PROG** button only once.

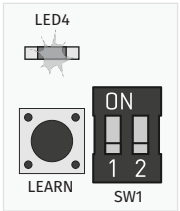

• To reset the memory, press the **LEARN** button for 10 seconds and all MX13 remote controls and transmitters will be cleared.
• While pressing **LEARN** button, **LED4** is on.
At the end of 10 seconds **LED4** will flash and turn off confirming the operation.

LEDs

• **LED 1:** (ON) Indicates that it is being powered from 230Vac. | OFF - No power supply.
• **LED 2:** (ON) Closed SEC Contact | (OFF) Contact "SEC" open (whenever a signal from the MX13 is sent the contact open).
• **LED 3**: (ON) Closed "STR" Contact | (OFF) Contact "STR" open.
• **LED 4:** Programming led.

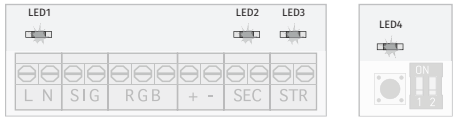

CONECTORS

• **L/N:** 230Vac power input.
SIG: Pulse input.
R/G/B: Connection of RGB LEDS.
• **+/-:** External accessory supply (max. 150mA).
• **SEC:** NC safety signal output.
• **STR:** Open signal output NO.
• **ANT:** Antenna plus pole input.
• **⏚:** Antenna ground input.

07. PROGRAMMATION

MX13 TRANSMITTER (OPCIONAL)

Wireless transmitter, which allows the connection of obstacle detection kits (safety rubber, magnetic contact, etc.) for communication with MR13.
This device performs automatic function tests with MR13 at defined time intervals, providing longer battery life.

DIPPER

• **Dippers 1** and **2** define the time interval for receiving MX13 test signals.
This communication is made to ensure that both devices are working perfectly.

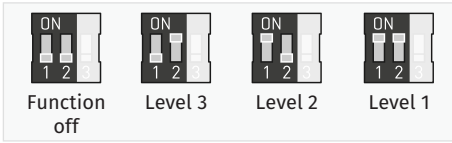

• **Dipper 3** has the function of changing the logic of the NO contact safety input to 8k2.

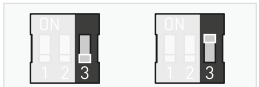

• The higher the communication level, the shorter the battery life.
• For MX13 and MR13 devices to be synchronized, you must configure dippers 1 and 2 in the same way on both devices.

PROG BUTTON AND LED 1

• The PROG button has the function to generate a new code, and transmit it to the receiver. Each time the button is pressed, LED1 flash, show that the signal is being transmitted.

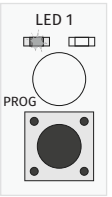

Each time the PROG button is pressed, the transmitted code changes.
This way, if you press the PROG button, you will have to program it again MR13.

CONECTOR

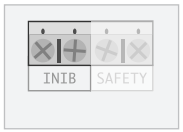

• **INIB** - This input has the function to desactivate the operation of the **SAFETY** input, through a **NO** contact for press button or magnetic contact.

• **SAFETY** - **NO** or **8K2** input, defined in dipper 3. Whenever this input is triggered an order will be sent to MR13 to open the **SEC** contact.